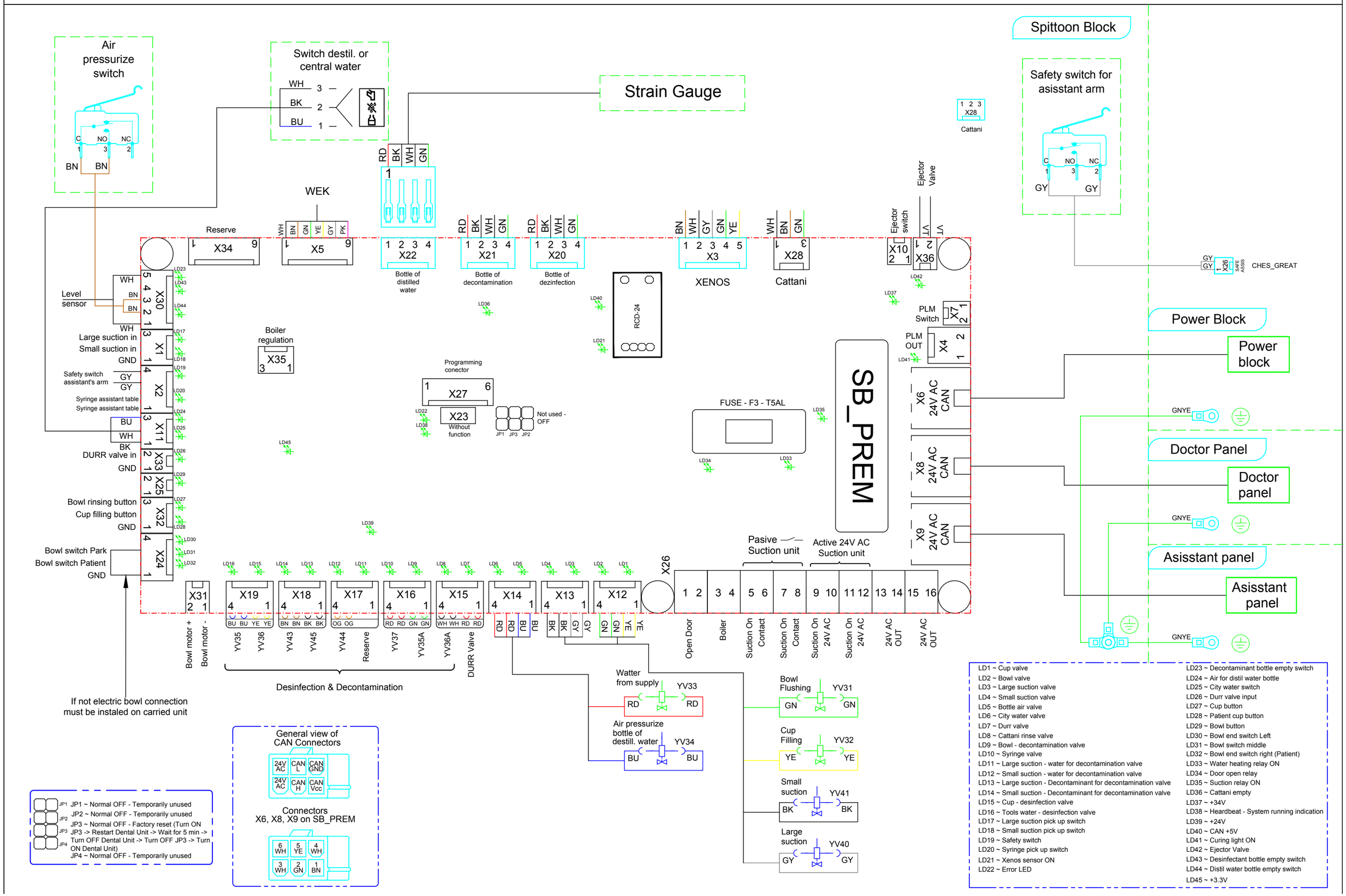Wiring diagram of the Spitton Block - Spittoon block module with valves used for
MODEL PRO 500 (DC 310), MODEL PRO 700 (DC 350), DC 240, DC 290, DL 210, DL 270, DL 290, DL 320, DL 330, DL 340, DL 380
(7.7.2022)