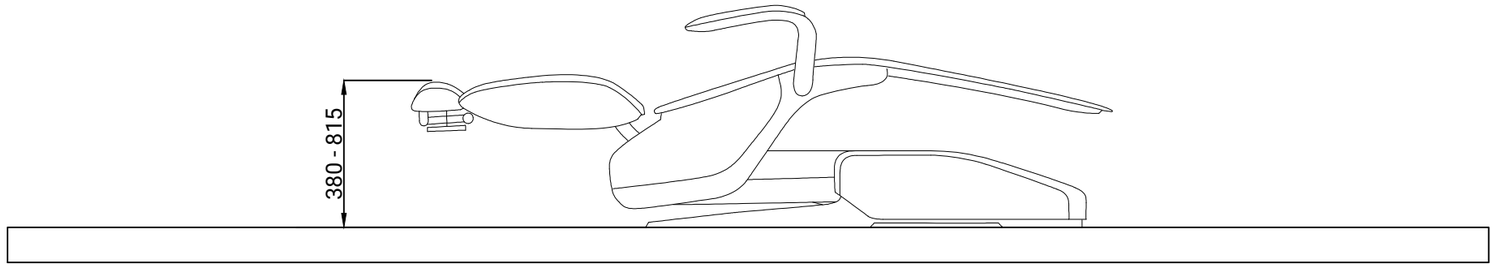

THE NEAREST OBJECT

DIPLOMAT MODEL PRO 500, 700, TYGI 400B

SCALE 1:20 1cm = 200mm

0 400 800

200 600 1000

revision: B

date: 09_2022

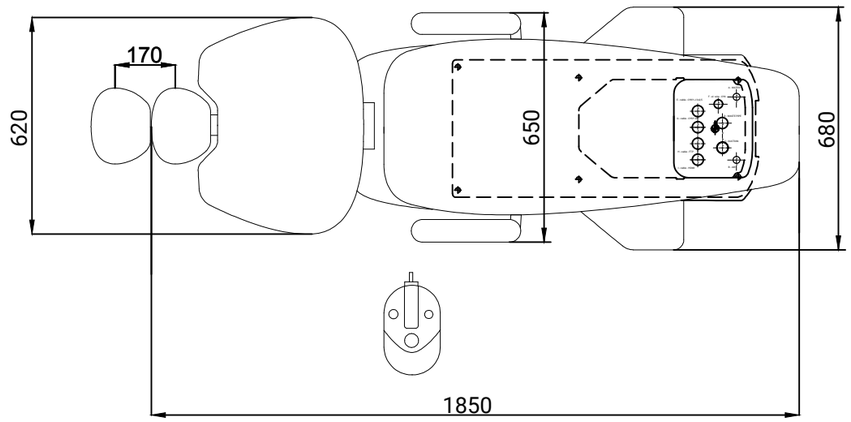

A - water supply 1/2" pipe (PVC, Cu) finish with pipe socket with G1/2" internal thread, 20 mm above the floor level
B - air supply 1/2" pipe (PVC,Cu) finish with G3/8" external thread, 20 mm above the floor level
C - suction PVC pipe Ø 32 or 40 + rubber cuff, 30 mm above the floor level
D - water waste PVC pipe Ø 32 or 40 + rubber cuff, 30 mm above the floor level
E - electrical conduit pipe (Ø32) - main supply 230V, cable CYKY-J 3x2,5 lenght above the floor level = 500 mm
F - electrical conduit pipe (Ø25) the safety earth wire CY4 - GNYE (green-yellow) lenght above the floor level = 500 mm
G - electrical conduit pipe (Ø32) suction control, cable CYSY 2x1 lenght above the floor level = 500 mm
H - electrical conduit pipe (Ø32) FTP CAT 5 4x2x0,5 lenght above the floor level = 500 mm, end in router
I - electrical conduit pipe (Ø32) cable HDMI, if there is monitor on dental unit the ending will be in computer

THE NEAREST OBJECT

THE NEAREST OBJECT

THE NEAREST OBJECT